ITEM NO.	PART NUMBER	DESCRIPTION	SYP TREATED WOOD/QTY.
1	2BG-1	2BG LEGS 2" PS GALV 2 3/8" O.D. .109 WALL	4
2	2BG-3L	2BG SEAT CLEAT LEFT	2
3	2BG-3R	2BG SEAT CLEAT RIGHT	2
4	IBG-2	BG and 2BG TOP CLEAT	2
5	BG-5	1 5/16" OD GALV TUBE .083 WALL	2
6	Hex Bolt_AI	HEX HEAD BOLT 3/8"-16x 5 3/4"	2
7	RHSNBOLT 0.375-16x2.25x1-N	RHSN CARRIAGE BOLT 3/8"-16 x 2 1/4"	21
8	RHSNBOLT 0.375-16x2.75x1-N	RH CARRIAGE BOLT 3/8"-16x 2 3/4"	12
9	LOCKW-3/8	LOCK WASHER 3/8"	35
10	HNUT 0.3750-16-D-N	HEX NUT 0.3750-16	35
11	6IPT5-7	6' 2"x 10" SYP TABLE TOP PLANK	1
12	6IW4-7	6' 2"x 10" SYP TABLE and SEAT PLANK	4

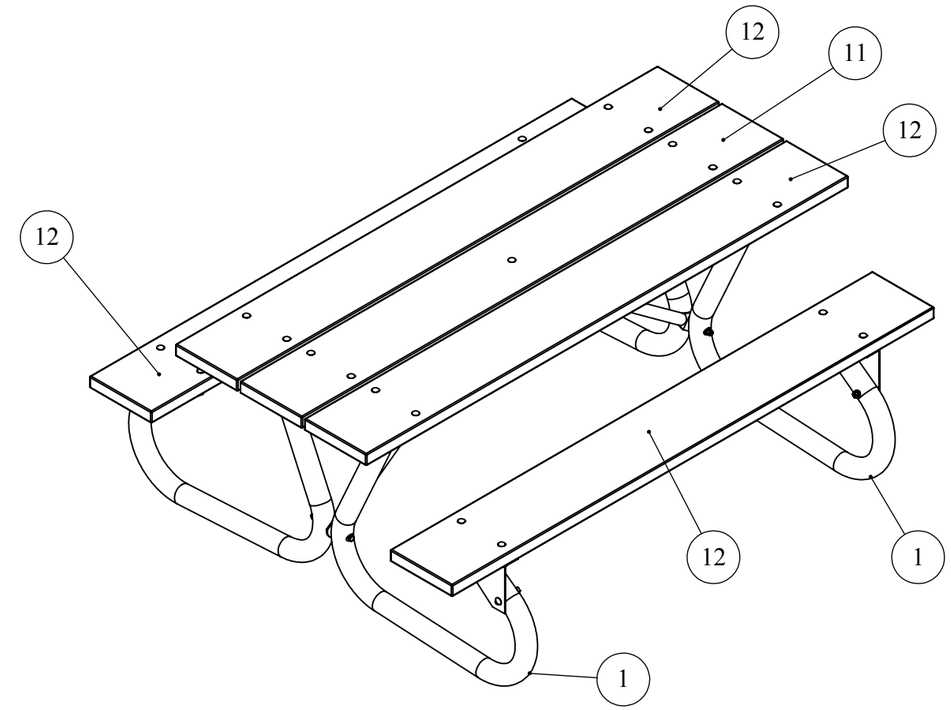

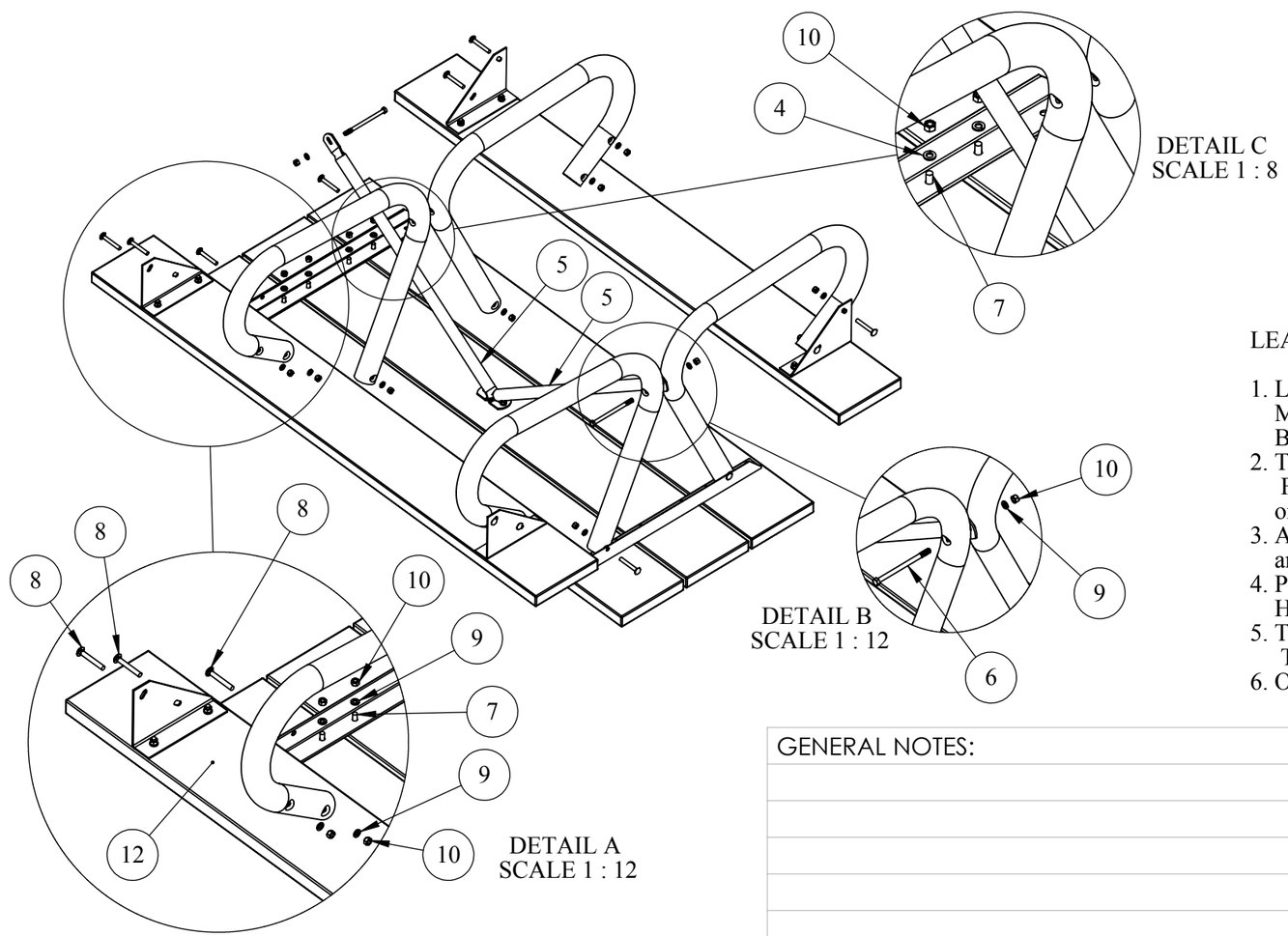

LEAVE ALL BOLTS AND NUTS FINGER TIGHTENED UNTIL ALL ARE IN PLACE

1. Lay the Table Top Planks on and Even Flat Surface with the Best Side Facing the Ground. The Middle Top Plank will have (6) Holes, (2) of the Middle Holes are 12" Apart, the Round Tube Braces will Fit There. The Remaining Planks will All Have (4) Holes.
2. There Will be (14) 3/8"Carriage Bolt x 2 1/4" Long that Hold the Top on to the Angle Iron Cleat. Fit them Into the Top Planks with the Head of the Bolt Facing the Grond. Place the Angle Iron Cleat on the Planks and Use the 3/8" Lock Washers and Nuts and Finger Tighten.
3. Attach the Legs to the Angle Iron Top Cleats with 3/8"x 2 3/4" Carriage Bolts, Lock Washers, and Nuts.
4. Place the Tube Brace as Shown, The One Flat Side that Fits Between the Legs will use a 3/8"x 5 3/4" Heax Head Bolt with Lock Washer and Nut.
5. There Will be Left and Right Seat Cleats, Fasten as Shown to the Under Side of the Seat Planks, Then Attach Them to the Legs.
6. Once All of the Hardware has Been Installed, Then Begin to Tighten the Bolts and Nuts

CONFIDENTIAL DRAWING AND INFORMATION IS NOT TO BE COPIED OR DISCLOSED TO OTHERS WITHOUT THE CONSENT OF KAY PARK. SPECIFICATIONS ARE SUBJECT TO CHANGE WITHOUT NOTICE.

GENERAL NOTES:

UNLESS OTHERWISE SPECIFIED:
DIMENSIONS ARE IN INCHES
TOLERANCES:
FRACTIONAL ± 1/32
BEND ± 1/2°
THREE PLACE DECIMAL ± .005
Do Not Scale Drawing
MATERIAL

	NAME	DATE
DRAWN	DAT	10/7/2014
CHECKED		
ENG APPR.		
MFG APPR.		
Last Saved	10/7/2014 2:20:59 PM	

COMMENTS:

SHEET 1 OF 1

Kay Park Rec

TITLE:

DESC. 6 FT BG TABLE GALVANIZED FRAME and TREATED SYP TOP and SEATS

S:\CADDRWGS\Solidworks\Tables\BG\

SIZE B | PART NO. 62BGW | REV

Path to Part or Assy - 62BGW S:\CADDRWGS\Solidworks\Tables\BG\ SYP TREATED WOOD