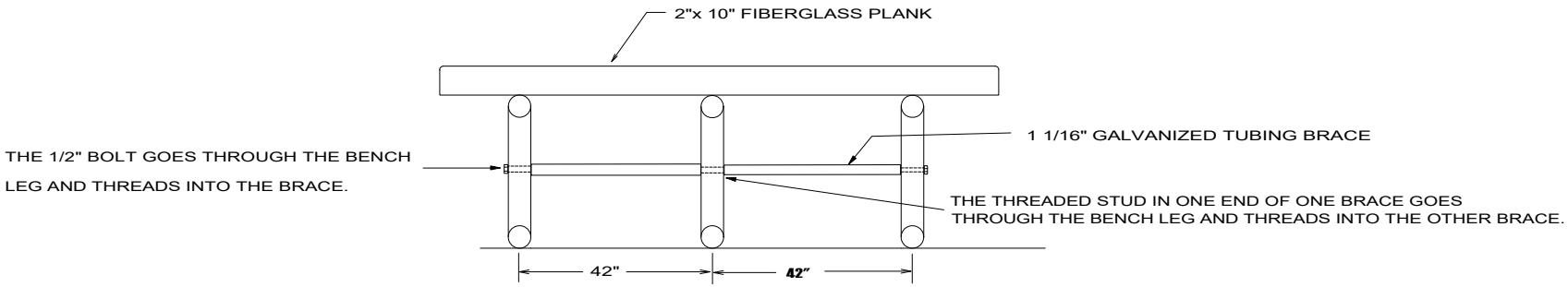

END VIEW

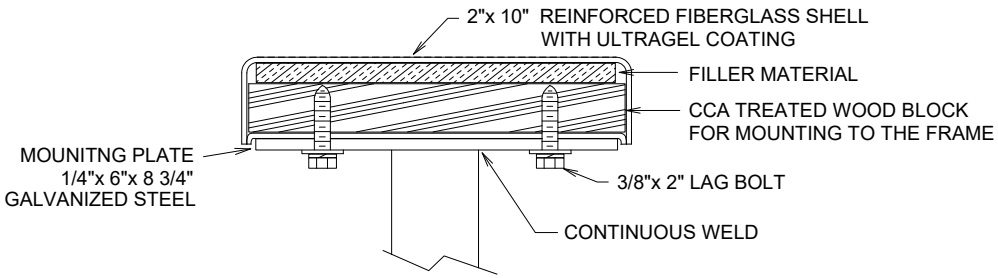

FILE No. 82PGLF

KAY PARK		
MODEL 82PGLF		WT. 88 lbs.
DRAWN BY LCB	DATE 12/12/00	SCALE NONE