DETAIL B:

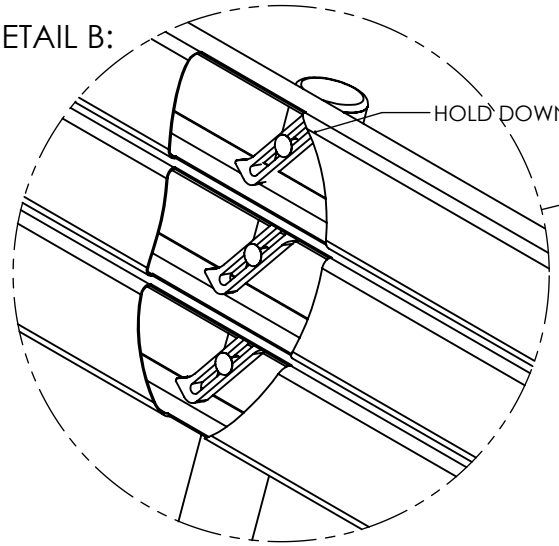

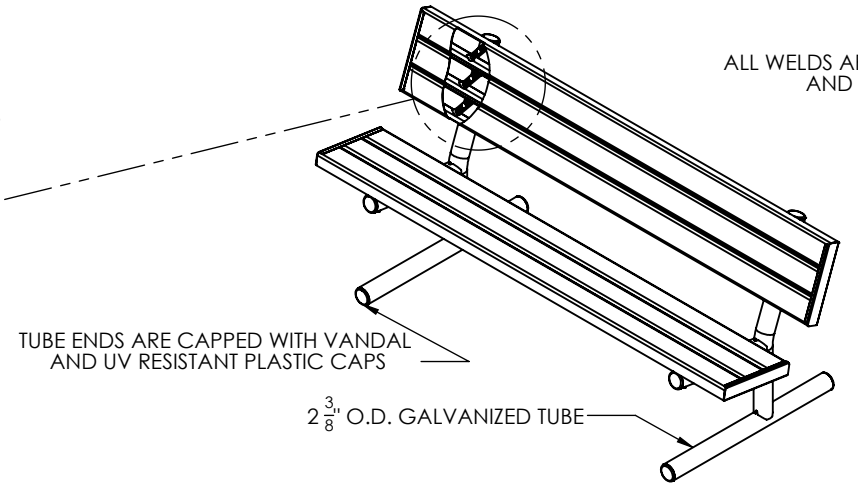

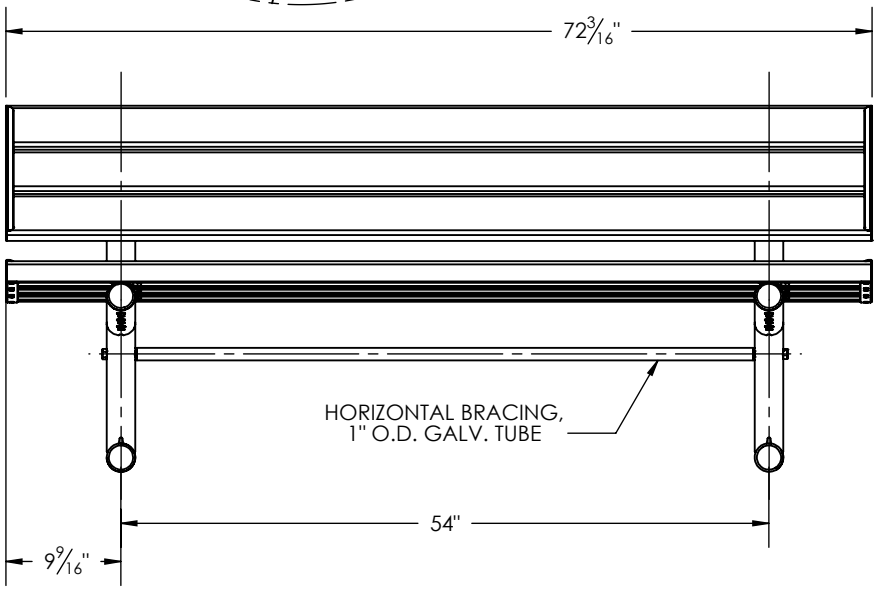

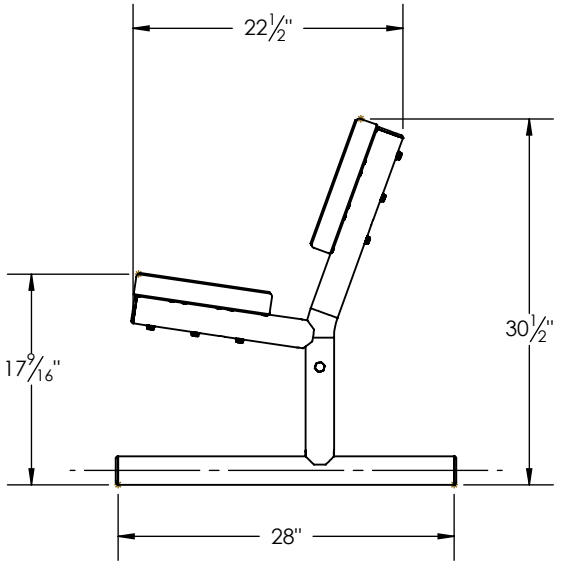

Sheet 1 of 1	Initials	Date	**Spec Drawing**	Model #: 62PGAS	**Kay Park-Rec Corp.**
Drawn by	BGS	6/12/2014	Description: 6' 2"x4" PORTABLE BENCH		1301 Pine Street Janesville, IA 50647 1-800-553-2476 WWW.KAYPARK.COM
Note:	This drawing and all information contained herin is the property of Kay Park Rec. and is not to be reproduced without express written permission. Kay Park Rec. assumes no responsibility for unauthorized use of this drawing.		Material: GALV. STEEL, ALUMINUM PLANK Weight: 66 lbs		