Kay Park Recreation

Making People Places, People Friendly Since 1954!

Email us: sales@kaypark.com or Call us: (800)553-2476

1301 Pine St. PO. Box 477 Janesville, IA 50647

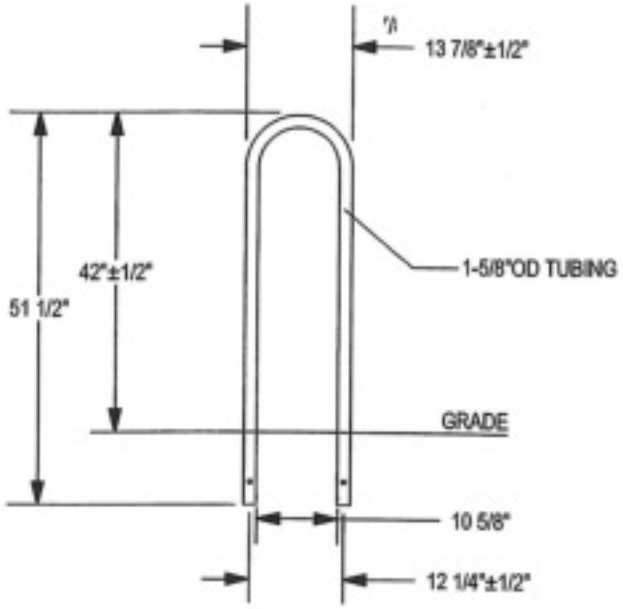

ELEVATION VIEW

1 LOOP - 3 BIKE CAPACITY

611CIG 611GIG
611CSM 611GSM

CHECK DESIRED MOUNT ☐

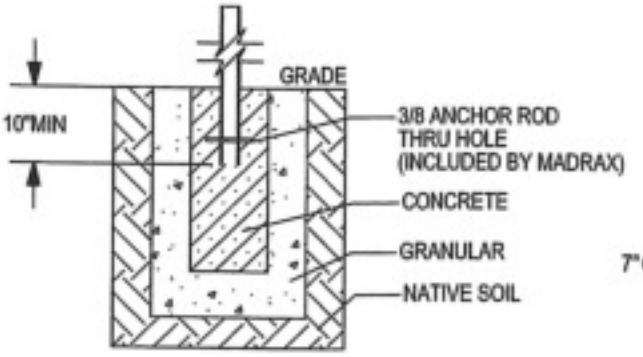

☐ IN GROUND MOUNT (IG)

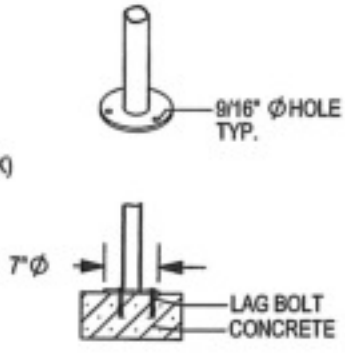

☐ SURFACE FLANGE MOUNT (SF)

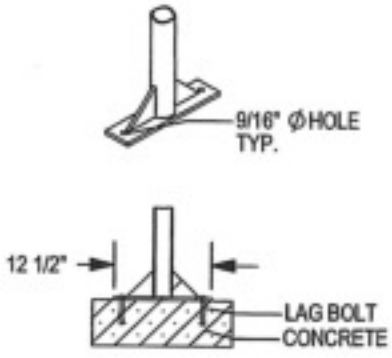

☐ SURFACE GUSSET MOUNT (SG)

SECTION VIEWS

3 BIKE, SURFACE OR IN GROUND MOUNT

DATE: 8-5-02
ENG: TLG

CONFIDENTIAL DRAWING AND INFORMATION IS NOT TO BE COPIED OR DISCLOSED TO OTHERS WITHOUT THE CONSENT OF TRILARY, INC. . SPECIFICATIONS ARE SUBJECT TO CHANGE WITHOUT NOTICE.

NOTES:
1. INSTALL BIKE RACKS ACCORDING TO MANUFACTURER'S SPECIFICATIONS.
2. CONSULTANT TO SELECT COLOR(FINISH), SEE MANUFACTURER'S SPECIFICATIONS.
3. SEE SITE PLAN FOR LOCATION OR CONSULT OWNER.
4. SPECIFICATIONS ARE SUBJECT TO CHANGE WITHOUT NOTICE.